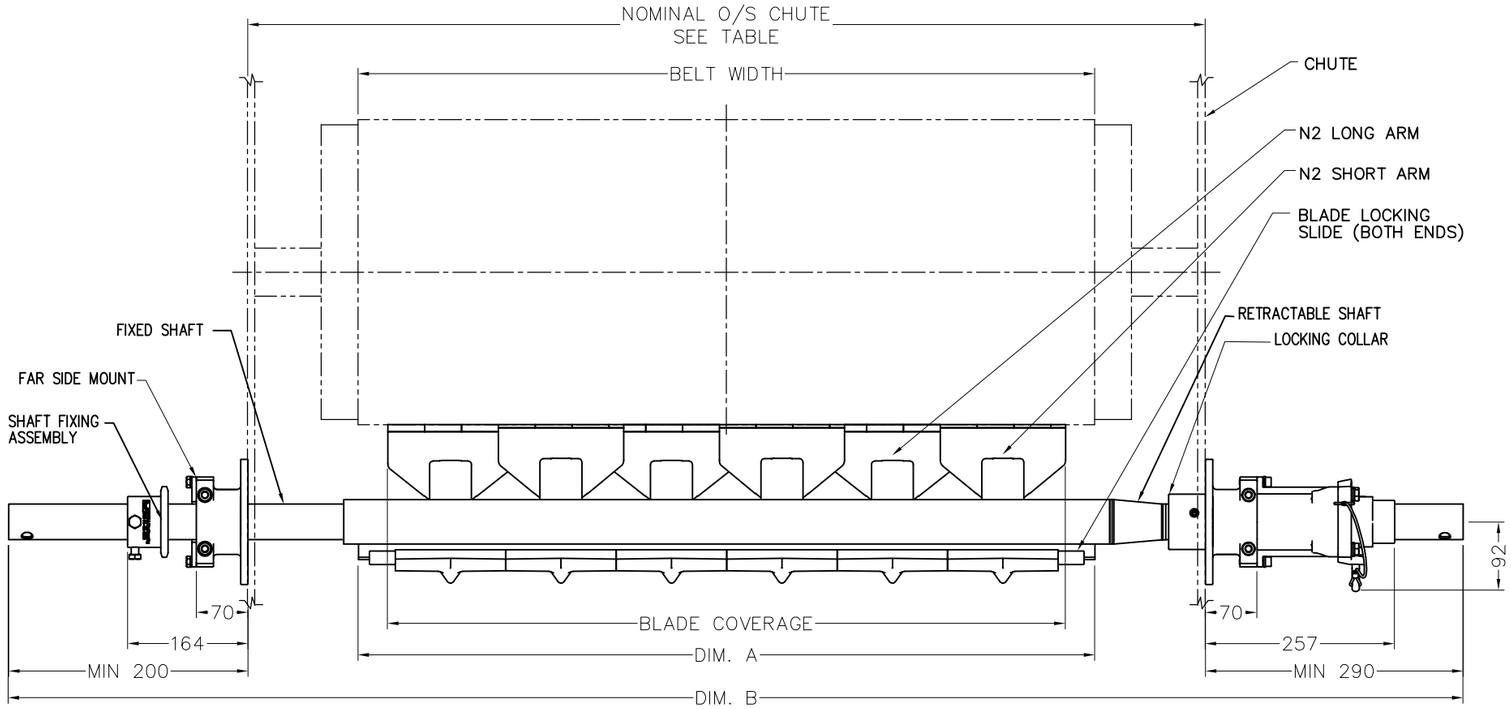

FRONT VIEW

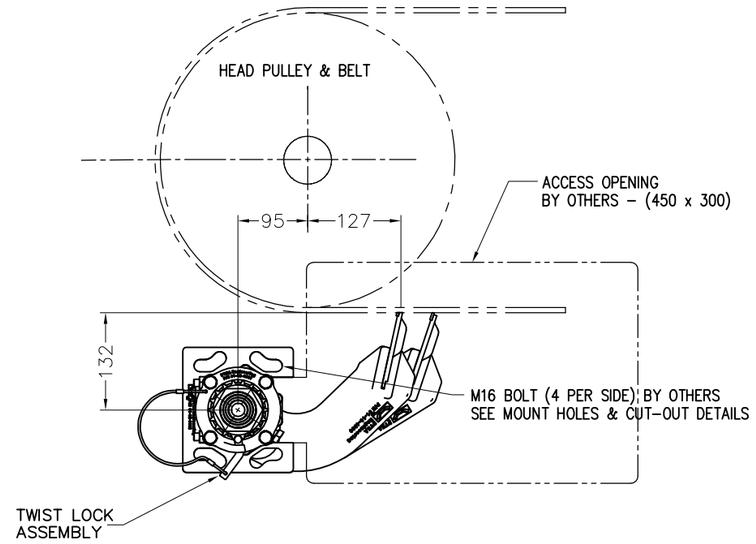

OPERATORS SIDE VIEW

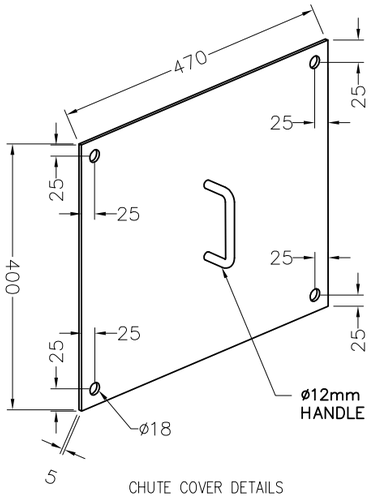

CHUTE COVER DETAILS
(SUPPLIED ON REQUEST)

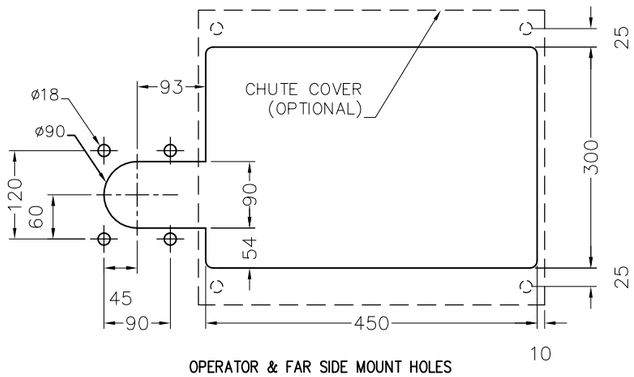

OPERATOR & FAR SIDE MOUNT HOLES
& CUT-OUT DETAILS – BY OTHERS

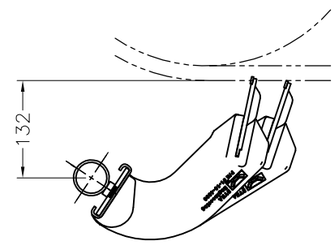

FAST FIT N2 SCRAPER SYSTEM
BLADE MOUNTING DETAIL

FOR SCRAPERS 1500 BELT WIDTH AND ABOVE CONTACT **DYNA ENGINEERING** FOR INSTALLATION ADVICE

BELT WIDTH	350	400	450	500	600	650	750	800	900	1000	1050	1100	1200	1350	1400	1500	1600	1800	2000	2100	2200	2400	2500	2600	2800	3000	3500
BLADE MODULES	2		3		3		4		5	6	6	7	7	8		9	10	11	12	13	13	14	15	16	17	18	22
BLADE COVERAGE	320		470		470		620		770	920	920	1070	1070	1220		1370	1520	1670	1820	1970	1970	2120	2270	2420	2570	2720	3320
SHAFT DIAMETER	ø60.3																	ø76.1			ø76.1 DUAL						
DIM. A	400		550		700		700		1000		1150		1150	1300		1600		1750	2050		2050	2200	2350	2500	2650	2800	3400
DIM. B	1300		1500		1600		1800		2000		2100		2200	2400		2600		2900	3200		3400	3600	3700	3800	4000	4200	4700
NOM O/S CHUTE	700		900		1000		1200		1400		1500		1600	1800		2000		2300	2600		2800	3000	3100	3200	3400	3600	4100

NOTES.

- SCRAPER DETAILED FOR A 1000mm WIDE BELT.
- TENSIONER CAN BE FITTED TO EITHER SIDE.
- SCRAPER WILL BE SUPPLIED WITH A SPECIALIZED TOOL FOR ADJUSTMENT, CONTACT DYNA FOR FURTHER INFORMATION.
- CHUTE COVER SUPPLIED ON REQUEST.

NOTES.

1. FAST FIT N2 SCRAPER SHOWN IS FOR A 1000mm WIDE BELT.
2. PATENT PENDING 2015902549

FASTFIT™ ORDERING INFORMATION

SCRAPER BODY PART NUMBER – 03-19-(BELT WIDTH)

EXAMPLE

1000 BELT WIDTH SCRAPER PART NUMBER – 03-19-1000

THIRD ANGLE PROJECTION | DO NOT SCALE

No.	REVISION	DRN.	CHD.	DATE
G				
F				
E				
D				
C				
B	DIMENSION TABLE (SHAFT DIMAETER)	SJ	GG	060917
A	FIRST ISSUE	SJ	GG	070616

TITLE

FastFit N2 SECONDARY RETRACTABLE SCRAPER
SHOWN WITH TWIST LOCK ADJUSTER
GENERAL ARRANGEMENT
P/N 03-19-0350 TO 03-19-3500

THIS IS A WORKSHOP DRAWING AND IS NOT TO BE ISSUED OUTSIDE OF DYNA ENGINEERING UNLESS AUTHORISED COPYRIGHT APPLIES.

DESIGN	DYNA
DRN.	SJ
DATE	070616
CHKD.	GG
DATE	070616
APPD.	
DATE	
SCALE	N.T.S.

DYNA Engineering™

P.O. BOX 84
BAYSWATER WA 6933
TEL: (08)9473 4300
FAX: (08)9473 4399

DWG No. GA-0127 | REV. B | A3